POWR-SPEED® Fuse

PSR Series High-Speed Square Body

Semiconductor Fuses • Bolted Blade • 40 A—2250 A

Description

Littelfuse PSR series high-speed square body fuses are specially designed for protection of power semiconductor devices such as diodes, triacs, IGBTs, SCRs, MOSFETs, and other solid-state devices that are typically designed into power conversion and power conditioning equipment. Variable frequency drives, inverters, UPS, rectifiers, and soft-starters are examples of typical equipment designed with sensitive power semiconductor devices that cannot withstand any line surge or overcurrent conditions and require high-speed protection.

The PSR series with bolted blades is designed and tested to IEC 60269-4.

Littelfuse POWR-*SPEED*® PSR series products offer optimized circuit protection at the extremely fast speed required to protect modern day power conversion devices. Available in bolted blade style termination (typical in North American market) with visual blown fuse indication standard on all fuses and optional micro-switch for external indication.

Features/Benefits

- Best in class dc performance
- Extremely current limiting
- Superior cycling capability
- Visual and optional microswitch fuse blown indication
- Low watt-loss design
- Compliance with US and Canadian requirements
- Fast-acting Class aR performance

Applications

- Power conversion devices (UPS, inverter, rectifiers, drives)
- Dc systems (dc common bus, dc injection braking)
- Battery protection application (energy storage systems)
- Electric vehicle charging stations
- Heaters and power supplies

Specifications

Voltage Rating	Ac: 450 V–1300 V Dc: 450 V–1000 V
Amperage Rating	40 A–2250 A
Interrupting Rating	Ac: 100 kA–200 kA Dc: 150 kA
Time Constant	10 ms at IR
Microswitch	Yes
Mounting	Bolted blade style
Material	Body: ceramic Contacts: plated copper
Approvals	cURus Recognized (File: E71611)
Applicable Standards	UL 248-13 IEC 60269-4 (Class aR)
Environmental	RoHS Compliant, REACH
Operating Temperature	-55 °C to +125 °C
Storage Temperature	Up to +35 °C with relative humidity <65 %
Country of Origin	Mexico

For additional product information, contact Littelfuse Technical Support at 1-800-TEC-FUSE or techline@littelfuse.com

Ordering Part Number

PSR 030 US 0550 Z

Series

Case Size
30, 31, 32, 33, 70, 71, 72, 73

Termination
US = bolted short blade
UL = bolted long blade

Amperage

Packing Quantity
X = (1 pc/box)
Z = (3 pcs/box)

Catalog Number

SERIES	CASE SIZE	TERMINATION	AMPERAGE	CATALOG NUMBER	ORDERING PART NUMBER
PSR	030	US	0550	PSR030US0550	PSR030US0550Z

Recommended Accessories

Microswitch: MS3H1000C (Case Size 30 to 33)
MS7H1500C (Case Size 70 to 73)

Fuseblock: LSCR series

Web Resources

Download technical documents: **Littelfuse.com/PSR**

Note: high-speed fuses are designed for fixed installations. They are not intended for use in moving vehicle applications.

©2025 Littelfuse, Inc.
Specifications are subject to change without notice.
Revised: 07/14/2025

Ordering Information (Continued)

CASE SIZE	BOLTED LONG BLADE (UL)			BOX QUANTITY
	CATALOG NUMBER	ORDERING PART NUMBER	UPC	
70	PSR070UL0050	PSR070UL0050Z	07945825297	3 pcs/box
	PSR070UL0063	PSR070UL0063Z	07945825298	3 pcs/box
	PSR070UL0080	PSR070UL0080Z	07945825299	3 pcs/box
	PSR070UL0100	PSR070UL0100Z	07945825300	3 pcs/box
	PSR070UL0125	PSR070UL0125Z	07945825301	3 pcs/box
	PSR070UL0160	PSR070UL0160Z	07945825302	3 pcs/box
	PSR070UL0200	PSR070UL0200Z	07945825303	3 pcs/box
	PSR070UL0250	PSR070UL0250Z	07945825304	3 pcs/box
	PSR070UL0280	PSR070UL0280Z	07945825305	3 pcs/box
	PSR070UL0315	PSR070UL0315Z	07945825306	3 pcs/box
	PSR070UL0350	PSR070UL0350Z	07945828534	3 pcs/box
	PSR070UL0400	PSR070UL0400Z	07945828535	3 pcs/box
71	PSR071UL0160	PSR071UL0160Z	07945825307	3 pcs/box
	PSR071UL0200	PSR071UL0200Z	07945825308	3 pcs/box
	PSR071UL0250	fPSR071UL0250Z	07945825309	3 pcs/box
	PSR071UL0280	PSR071UL0280Z	07945825310	3 pcs/box
	PSR071UL0315	PSR071UL0315Z	07945825311	3 pcs/box
	PSR071UL0350	PSR071UL0350Z	07945825312	3 pcs/box
	PSR071UL0400	PSR071UL0400Z	07945825313	3 pcs/box
	PSR071UL0450	PSR071UL0450Z	07945825314	3 pcs/box
	PSR071UL0500	PSR071UL0500Z	07945828536	3 pcs/box
	PSR071UL0550	PSR071UL0550Z	07945828537	3 pcs/box
	PSR071UL0630	PSR071UL0630Z	07945828538	3 pcs/box
72	PSR072UL0250	PSR072UL0250X	07945825315	1 pc/box
	PSR072UL0280	PSR072UL0280X	07945825316	1 pc/box
	PSR072UL0315	PSR072UL0315X	07945825317	1 pc/box
	PSR072UL0350	PSR072UL0350X	07945825318	1 pc/box
	PSR072UL0400	PSR072UL0400X	07945825319	1 pc/box
	PSR072UL0450	PSR072UL0450X	07945825320	1 pc/box
	PSR072UL0500	PSR072UL0500X	07945825321	1 pc/box
	PSR072UL0550	PSR072UL0550X	07945825322	1 pc/box
	PSR072UL0630	PSR072UL0630X	07945825323	1 pc/box
	PSR072UL0700	PSR072UL0700X	07945828539	1 pc/box
	PSR072UL0800	PSR072UL0800X	07945828540	1 pc/box
	PSR072UL0900	PSR072UL0900X	07945828541	1 pc/box
	PSR072UL1000	PSR072UL1000X	07945828542	1 pc/box
73	PSR073UL0315	PSR073UL0315X	07945825324	1 pc/box
	PSR073UL0350	PSR073UL0350X	07945825325	1 pc/box
	PSR073UL0400	PSR073UL0400X	07945825326	1 pc/box
	PSR073UL0450	PSR073UL0450X	07945825327	1 pc/box
	PSR073UL0500	PSR073UL0500X	07945825328	1 pc/box
	PSR073UL0550	PSR073UL0550X	07945825329	1 pc/box
	PSR073UL0630	PSR073UL0630X	07945825330	1 pc/box
	PSR073UL0700	PSR073UL0700X	07945825331	1 pc/box
	PSR073UL0800	PSR073UL0800X	07945828543	1 pc/box
	PSR073UL0900	PSR073UL0900X	07945828544	1 pc/box
	PSR073UL1000	PSR073UL1000X	07945828545	1 pc/box
	PSR073UL1100	PSR073UL1100X	07945828546	1 pc/box
	PSR073UL1250	PSR073UL1250X	07945828547	1 pc/box
	PSR073UL1400	PSR073UL1400X	07945828548	1 pc/box

©2025 Littelfuse, Inc.
Specifications are subject to change without notice.

Dimensions (US and UL)

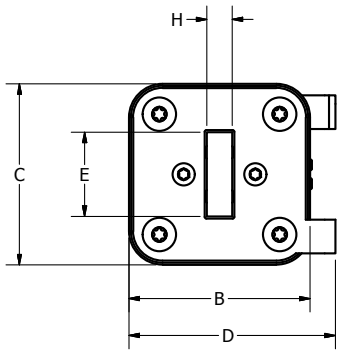

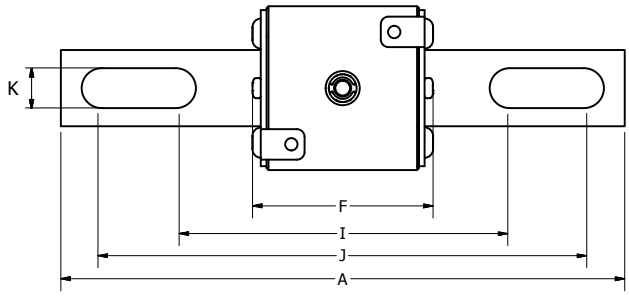

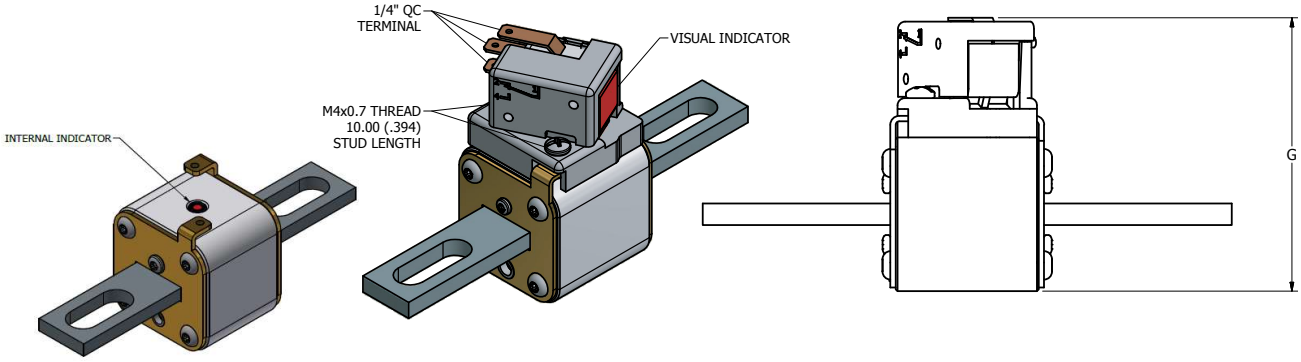

DIMENSIONS MM (IN)														
CASE SIZE	MOUNTING STYLE	A	B	C	D	E	F	G	H	I	J	K	RECOMMENDED FASTENER	TIGHTENING TORQUE (REFERENCE ONLY)
30	Short [US]	127.2 (5.01)	43.0 (1.69)	43.0 (1.69)	49.0 (1.93)	20.0 (0.79)	47.7 (1.88)	77.9 (3.07)	6.0 (0.24)	69.5 (2.74)	106.3 (4.19)	10.5 (0.41)	10 mm (3/8)	26 Nm
	Long [UL]	148.0 (5.83)	43.0 (1.69)	43.0 (1.69)	49.0 (1.93)	20.0 (0.79)	47.7 (1.88)	77.9 (3.07)	6.0 (0.24)	88.5 (3.48)	125.8 (4.95)	10.5 (0.41)	10 mm (3/8)	26 Nm
31	Short [US]	133.2 (5.24)	51.5 (2.03)	51.5 (2.03)	57.5 (2.26)	25.0 (0.98)	49.2 (1.94)	86.4 (3.40)	6.0 (0.24)	68.8 (2.71)	108.3 (4.26)	14.0 (0.55)	12 mm (1/2)	64 Nm
	Long [UL]	153.2 (6.03)	51.5 (2.03)	51.5 (2.03)	57.5 (2.26)	25.0 (0.98)	49.2 (1.94)	86.4 (3.40)	6.0 (0.24)	92.3 (3.63)	128.3 (5.05)	14.0 (0.55)	12 mm (1/2)	64 Nm
32	Short [US]	133.2 (5.24)	60.0 (2.36)	60.0 (2.36)	66.0 (2.60)	25.0 (0.98)	49.2 (1.94)	94.9 (3.74)	6.0 (0.24)	68.8 (2.71)	108.3 (4.26)	14.0 (0.55)	12 mm (1/2)	64 Nm
	Long [UL]	153.2 (6.03)	60.0 (2.36)	60.0 (2.36)	66.0 (2.60)	25.0 (0.98)	49.2 (1.94)	94.9 (3.74)	6.0 (0.24)	92.3 (3.63)	128.3 (5.05)	14.0 (0.55)	12 mm (1/2)	64 Nm
33	Short [US]	135.4 (5.33)	73.5 (2.89)	73.5 (2.89)	79.5 (3.13)	36.0 (1.42)	50.2 (1.98)	108.4 (4.27)	6.0 (0.24)	75.8 (2.98)	107.3 (4.22)	16.0 (0.63)	14 mm (9/16)	92 Nm
	Long [UL]	155.2 (6.11)	73.5 (2.89)	73.5 (2.89)	79.5 (3.13)	36.0 (1.42)	50.2 (1.98)	108.4 (4.27)	6.0 (0.24)	94.8 (3.73)	126.3 (4.97)	16.0 (0.63)	14 mm (9/16)	92 Nm
70	Long [UL]	151.2 (5.95)	43.0 (1.69)	43.0 (1.69)	49.0 (1.93)	20.0 (0.79)	71.7 (2.82)	77.9 (3.07)	6.0 (0.24)	92.8 (3.65)	130.3 (5.13)	10.5 (0.41)	10 mm (3/8)	26 Nm
71	Long [UL]	157.2 (6.19)	51.5 (2.03)	51.5 (2.03)	57.5 (2.26)	25.0 (0.98)	73.2 (2.88)	86.4 (3.40)	6.0 (0.24)	92.8 (3.65)	132.3 (5.21)	14.0 (0.55)	12 mm (1/2)	64 Nm
72	Long [UL]	157.2 (6.19)	60.0 (2.36)	60.0 (2.36)	66.0 (2.60)	25.0 (0.98)	73.2 (2.88)	94.9 (3.74)	6.0 (0.24)	92.8 (3.65)	132.3 (5.21)	14.0 (0.55)	12 mm (1/2)	64 Nm
73	Long [UL]	159.4 (6.28)	73.5 (2.89)	73.5 (2.89)	79.5 (3.13)	36.0 (1.42)	74.2 (2.92)	108.4 (4.27)	6.0 (0.24)	99.8 (3.93)	131.3 (5.17)	16.0 (0.63)	14 mm (9/16)	92 Nm

©2025 Littelfuse, Inc.
Specifications are subject to change without notice.

Revised: 07/14/2025